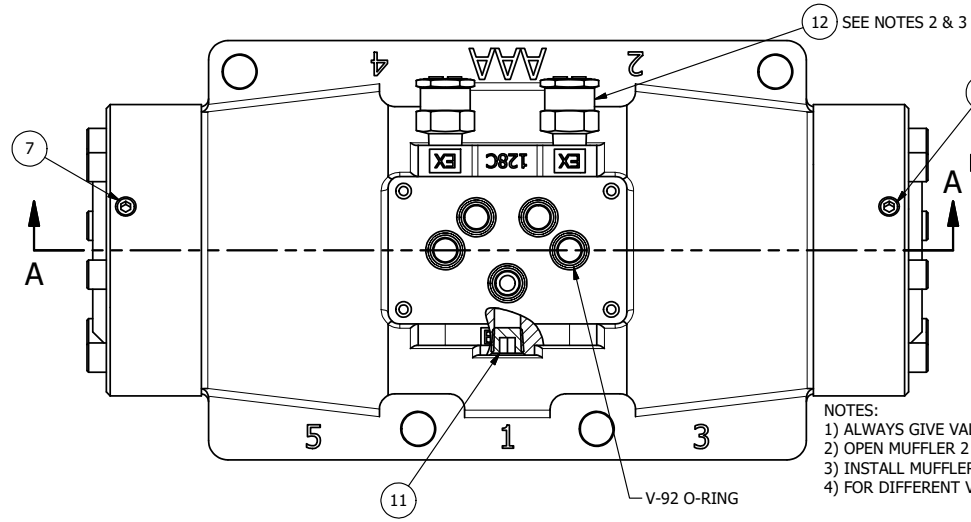

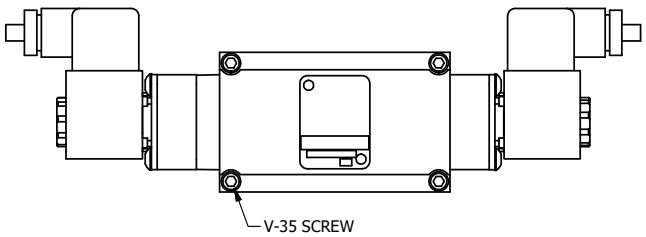

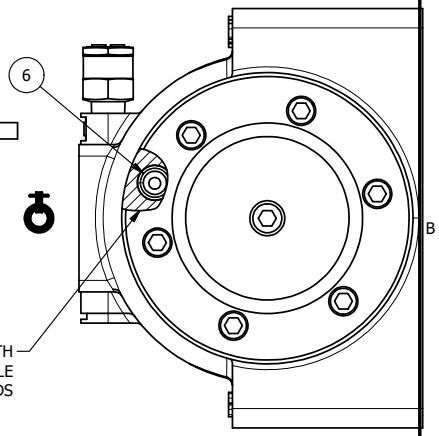

NOTES:
1) ALWAYS GIVE VALVE MODEL AND PART NUMBER WHEN ORDERING.
2) OPEN MUFFLER 2 TURNS FROM CLOSED POSITION. TIGHTEN LOCK NUT ON MUFFLER.
3) INSTALL MUFFLER WITH MAGNALUBE-G GREASE 1 TO 1-1/2 TURNS FROM HAND TIGHT INTO BODY.
4) FOR DIFFERENT VOLTAGES OTHER THAN 24VDC, CONSULT FACTORY.

THE FOLLOWING PARTS ARE INCLUDED WITH THE SUBPLATE VALVE AND ARE USED TO ASSEMBLE.		
QTY	PART NO	DESCRIPTION
5	V-92	O-RING, BUNA-N, 70 DURO, AS-014, (REF 1/2 X 5/8 X 1/16), 3/8" SUBPLATE
4	V-35	SCREW, 10-24 X 7/8, SOCKET HEAD CAP

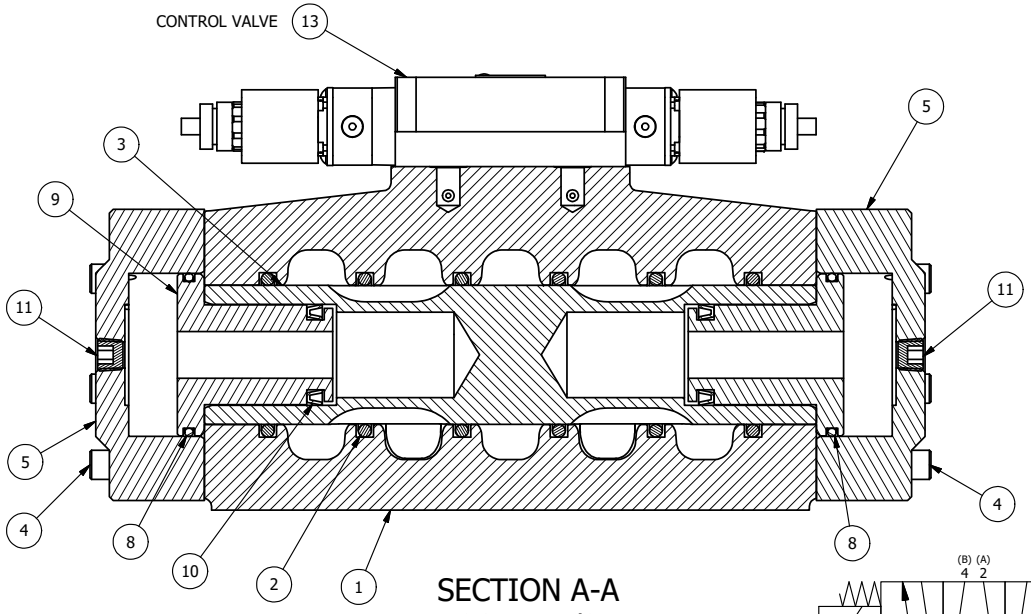

SECTION A-A
SCALE 1/2
VIEW FROM 3 PORT SIDE

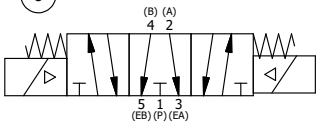

FLG	QTY	PART NO	DESCRIPTION
13	1	ESY3PDT 24VDC	3/8" SUBPLATE, DBL SOL, 3 POS, SPR CTR, SOL SHFT, REGEN CTR SPL, ATEX, 24VDC
12	2	MFC2	ASSEMBLY - MUFFLER FLOW CONTROL, 1/4" NPT
11	3	V-337	PLUG, SOCKET 1/4-18 FLUSH SEAL PLUG
10	2	V-129	U-CUP, 1-5/8 X 1-1/8 X 1/4, NITRILE
9	2	SPC12	SPOOL - PRESS. CTR, 1 1/2" & 2" VALVE
8	2	V-128	O-RING, BUNA-N, 70 DURO, AS-229, (REF 2-3/8 X 2-5/8 X 1/8), 3 POS, 1-1/2" & 2" VALVES
7	2	V-231	PLUG, SOCKET PRESSURE 1/16-27X 7/8 TAPER FOR 122V,192V,FOR EC
6	2	V-89	O-RING, BUNA-N, 70 DURO, AS-110, (REF 3/8 X 9/16 X 3/32), 1" & 2" SUBPLATE PILOT
5	2	PCE12E	ENDCAP - PRESSURE CTR, SOLID, 6061-T6 AL, 1-1/2" & 2" VALVES
4	12	V-143	SCREW, 5/16-18 X 2, SOCKET HEAD CAP
3	1	S12G	SPOOL - 'G', FLOAT CTR, 1 1/2" & 2" VALVE
2	6	V-123	O-RING, BUNA-N, 70 DURO, AS-331, (REF 2-1/4 X 2-5/8 X 3/16), 1-1/2" & 2" VALVES
1	1	B12-6	BODY, 1 1/2" SIDE PORT, PIGGY BACK

LIMITS ON DIMENSIONS UNLESS OTHERWISE SPECIFIED
2-PL DECIMAL ± .01
3-PL DECIMAL ± .005
FRACTIONAL ± 1/64
ANGULAR ± 1/2'

AAA PRODUCTS INTERNATIONAL
7114 Harry Hines Blvd
Dallas, TX 75235

DRAWN: RMcKenna	DATE: 11/3/2015	CHECKED: KWaite	DATE: 11/3/2015
SCALE: 1/2	SHEET: 1 OF 1	RELEASED: HWomack	DATE: 11/3/2015

TITLE: 1-1/2" SIDE PORT, DBL SOL, 3 POS, PRESS CTR, SOL SHFT, FLOAT CTR SPL, ATEX, 24VDC

PART NO.: ESY12GT 24VDC

REV.:

D:\Engineering\Product\Valve\Assembly\Standard\ESY\DWG\ESY12GT 24VDC.dw

THE INFORMATION CONTAINED WITHIN THIS DOCUMENT IS PROPRIETARY TO AAA PRODUCTS AND MAY NOT BE DISCLOSED WITHOUT PRIOR WRITTEN CONSENT